Convotherm 4 easyTouch Combi Steamer

C4GST6.10C GAS DIRECT STEAM 7 x 1/1GN

- Direct steam system
- ACS+ (Advanced Closed System +) operating modes: Steam, Combi-steam, Convection
- ACS+ Extra Functions:
  - Crisp&Tasty - 5 moisture-removal settings
  - BakePro – 5 levels of traditional baking
  - HumidityPro - 5 humidity settings
  - Controllable fan – 5 speed settings
- easyTouch 9" full-touch screen
- ConvoClean+ fully automated cleaning system with eco, express and regular modes, including optional single-measure dispensing
- Ethernet / LAN interface
- HygienicCare
- USB port integrated in the control panel
- Steam generated by injecting water into the cooking chamber
- Right-hinged appliance door

Standard Features

- ACS+ operating modes:
  - Steam (30-130°C) with guaranteed steam saturation
  - Combi-steam (30-250°C) with automatic humidity adjustment
  - Convection (30-250°C) with optimised heat transfer
- HygienicCare: safety through antibacterial surfaces
  - easyTouch control panel
  - Door handle and recoil hand shower
- easyTouch user interface:
  - Full 9" full-touch screen
  - Press&Go - automatic cooking using quick-select buttons
  - TrayTimer - load management for different products at the same time
  - Regenerate+ - flexible multi-mode regenerating function
  - ecoCooking - energy-save function
  - Low-temperature cooking / Delta-T cooking
  - Cook&Hold - cooking and holding in one process
  - 399 cooking profiles containing up to 20 steps
  - On-screen Help with topic-based video function
  - Starting time preselect
- Multi-point core temperature sensor
- Door handle with safety latch and sure-shut function
- RS232 and RS485 interface
- Data storage for HACCP figures
- Preheat and Cool down function

Options

- Disappearing door
- Steam and vapour removal (built-in condensation hood)
- Grill model with grease collection
- ConvoSmoker smoker model
- Marine model
- Available in various voltages
- Sous-vide sensor, with external socket
- Core temperature sensor, with external socket

Convotherm 4 easyTouch Combi Steamer

C4GST6.10C GAS DIRECT STEAM 7 x 1/1GN

Front view

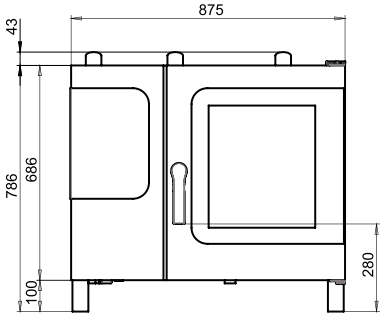

View from above with wall clearances

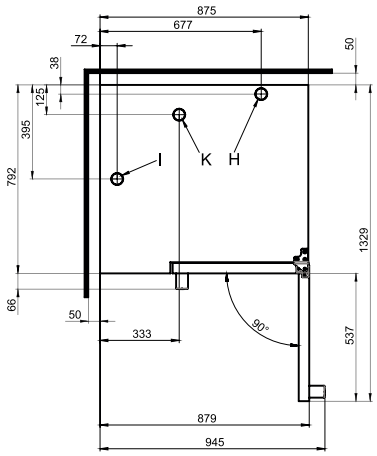

Connection positions in appliance floor

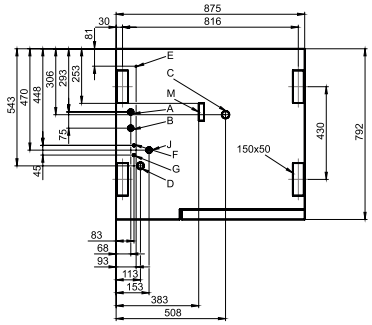

A Water connection (for water injection)
B Water connection (for cleaning, recoil hand shower)
C Drain connection DN 50
D Electrical connection
E Equipotential bonding
F Rinse-aid connection
G Cleaning-agent connection
H Airvent Ø 50mm
I Ventilation port Ø 50 mm
J Gas supply
K Exhaust outlet (cooking-chamber heating element)
M Safety overflow 80 mm x 25 mm

DIMENSIONS	
Width	875 mm
Depth	792 mm
Height	786 mm
Weight	119 kg
PACKED DIMENSIONS	
Width	1110 mm
Depth	940 mm
Height	1010 mm
Weight (including cleaning system)	144 kg
Safety clearances*	
Rear	50 mm
Right	50 mm
Left (larger recommended for servicing)	50 mm
Top (for ventilation)	1000 mm

*Heat sources must lie at a minimum distance of 50 cm from the appliance.

INSTALLATION REQUIREMENTS
For precise installation instructions please refer to the units installation manual

LOADING CAPACITY	
Max. number of food containers	
Shelf distance	68mm
GN 1/1 (with standard rack)	7
600 x 400 baking sheet (with appropriate rack)	5
Max. loading weight GN 1/1 / 600 x 400	
Per combi steamer	30 kg
Per shelf	15 kg

ELECTRICAL SUPPLY	
230-240VAC, 50/60Hz, 1P+N+E	
Rated power consumption	0.5 kW
Rated current	2.3 A
Fuse	16 A
RCD (GFCI), frequency converter (singlephase)	Type A (recommended), type B/F (optional)
3 Pin plug (10 Amp)	
Cordset fitted	

GAS SUPPLY	
Gas Connection for natural or LPG	R3/4
Installation conditions	customer premise
Nominal gas consumption	42 MJ/hr
Convection power output	42 MJ/hr

WATER CONNECTION	
Water supply	
2 x G 3/4" permanent connection, optionally including connecting pipe (min. DN13 / 1/2")	
Flow pressure	150 - 600 kPa (1.5 - 6 bar)
Appliance drain	
Drain version	Permanent connection (recommended) or funnel waste trap
Type	DN50 (min. internal Ø: 46 mm)
Slope for waste-water pipe	min. 5% (3°)

WATER QUALITY	
Drinking water	
(install water treatment system if necessary)	
Treated tap water for water injection	
Untreated tap water for cleaning, recoil hand shower	
Total hardness	
Injection (soft water)	4-7 °dh / 70-125 ppm / 7-13 °TH / 5-9 °e
Cleaning, recoil hand shower (hard water)	4-20 °dh / 70-360 ppm / 7-35 °TH / 5-25 °e
Properties	
pH	6.5 - 8.5
Cl- (chloride)	max. 60 mg/l
Cl_2 (free chlorine)	max. 0.2 mg/l
SO_4^{2-} (sulphate)	max. 150 mg/l
Fe (iron)	max. 0.1 mg/l
Temperature	max. 40°C
Electrical conductivity	min. 20 µS/cm

EMISSIONS	
Heat output	
Latent heat	2100 kJ/h / 0.58 kW
Sensible heat	2500 kJ/h / 0.69 kW
Waste water temperature	max. 80 °C
Noise during operation	max. 70 dBA

MOFFAT

Australia
moffat.com.au

New Zealand
moffat.co.nz

Australia
Moffat Pty Limited

Victoria/Tasmania
740 Springvale Road
Mulgrave, Victoria 3170
Ph 03-9518 3888
Fax 03-9518 3833
vsales@moffat.com.au
www.moffat.com.au

New South Wales
Ph 02-8833 4111
nswsales@moffat.com.au

South Australia
Ph 03-9518 3888
vsales@moffat.com.au

Queensland
Ph 07-3630 8600
qldsales@moffat.com.au

Western Australia
Ph 08-9202 6820
bgarcia@moffat.com.au

New Zealand
Moffat Limited

Christchurch
45 Illinois Drive
Izone Business Hub
Rolleston 7675
New Zealand
Telephone +64 3-983 6600
Facsimile +64 3-983 6660
sales@moffat.co.nz

Auckland
Ph +64 9-574 3150
sales@moffat.co.nz

In line with policy to continually develop and improve its products, Moffat Limited reserves the right to change specifications and design without notice.

© Copyright Moffat Ltd
AN.CON.S.1402

24:7 Service Support